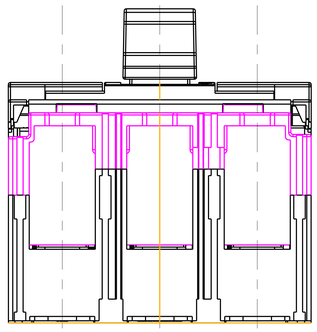

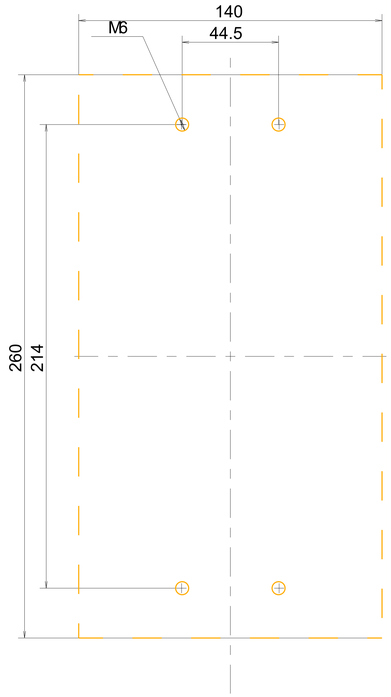


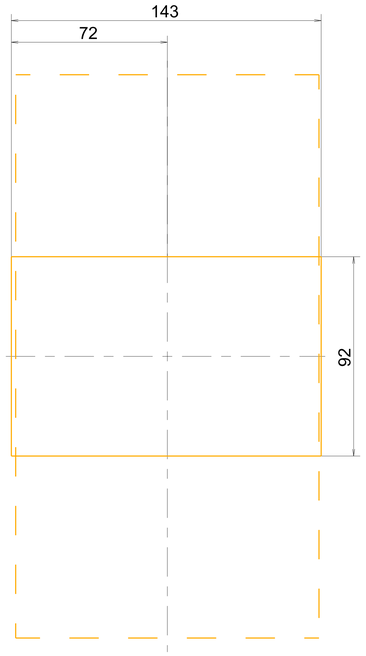


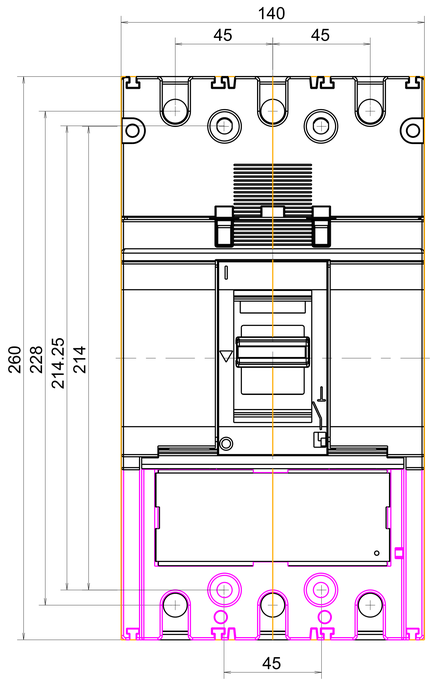


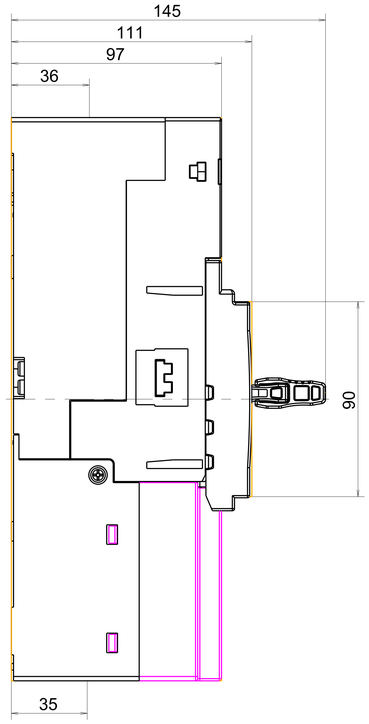


| Ind. | N° OC/OM | Nb. | Description | Dessiné par | Vérifié par | Date |
|---|---|---|---|---|---|---|
| -- | -- | -- | Création | -- | -- | -- |

| | | | | | |
|---|---|---|---|---|---|
| Matière / Material: -- | Code: -- | Epaisseur/Thickness: -- | Volume (cm3): 1020.36 | Design Details: 1.00 00.00 00 | Pp ≥ 1.33 Ppk > 1 for Toleranced Dimensions and Critical Dimensions |
| Traitement / Treatment: -- | Code: -- | Surface (cm2): 6733.63 | ISO 8015 Compliant General Tolerances:ISO 2768 m-H ROHS Compliant 2002/95/CE | | |
| Dessiné par / Designed by: -- Date / Date: -- | Désignation: -- | | | | |
| Contrôlé par / Controled by: -- Date / Date: -- | Désignation: -- | | | | |
| hager Electro S.A. F 67210 OBERNAI | Echelle/Scale: 1.000 | N°: / Nr: ASSY_400_3P_FC | | 00 | |
| | Format / Size: A0 | Replace: -- Remplace: -- | | | |

This drawing is the property of Hager Company. It is not to be reproduced and communicated without the authorisation.