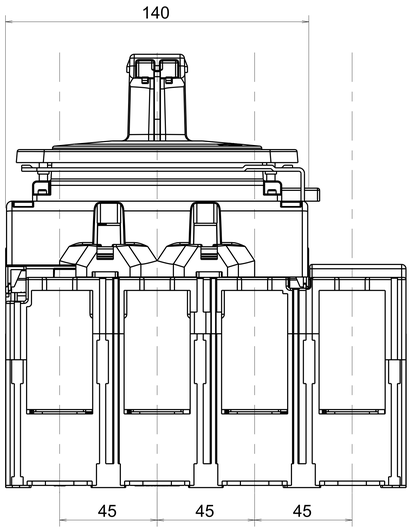

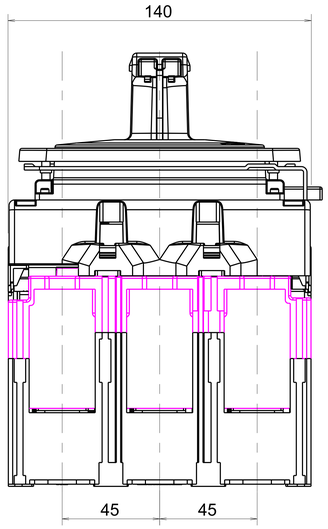

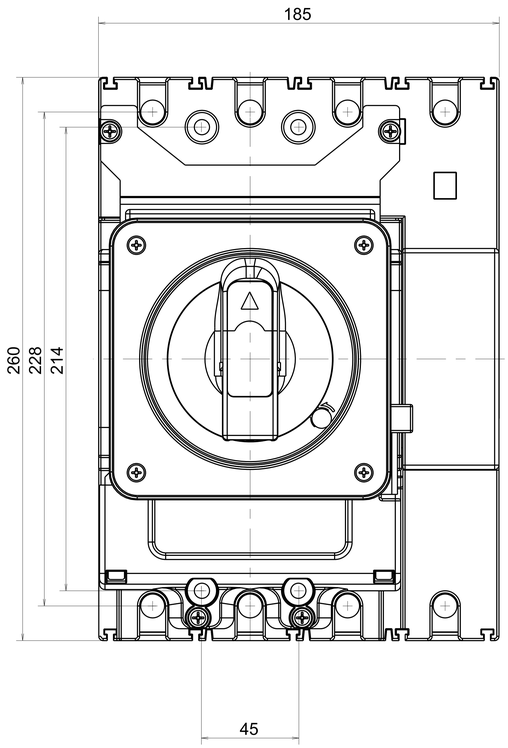

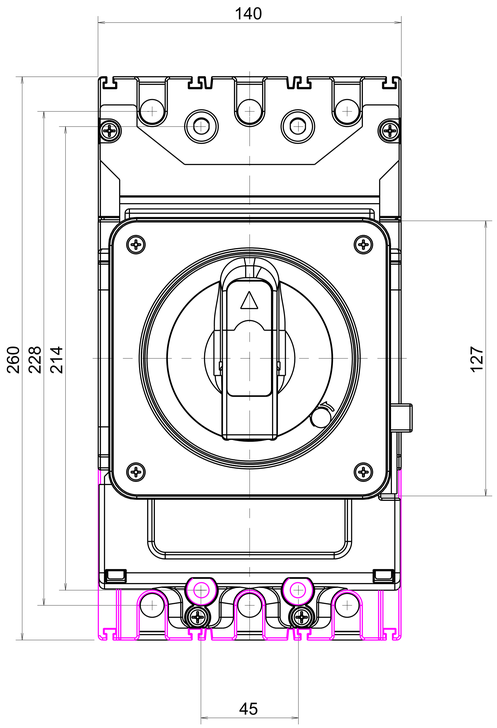

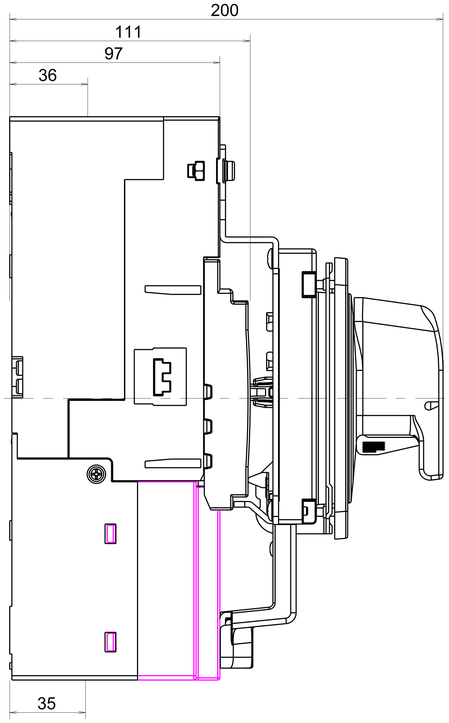

Ind.	N° OC/OM	Nb.	Description	Dessiné par	Vérifié par	Date
--	--	--	Création	--	--	--

*Matériel / Material: --	Code: --	Dimension/Thickness: --	Volume (cm3): 1752.22	Design Degree / IS2 8015 lev: --	Pp > 1.33 Ppk > 1 for Toleranced Dimensions and Critical Dimensions
*Traitement / Treatment: --	Code: --	Surface (cm2): 12386.19	ISO 8015 Compliant General Tolerances:ISO 2768 m-H ROHS Compliant 2002/95/CE		
*Dessiné par / Designed by: --	Date / Date: --	Designation: --			
*Controlé par / Controlled by: --	Date / Date: --	Designation: --			

hager

Electro S.A. F-67210 OBERNAI

Échelle/Scale	Format / Size	Remplace / Replace	Remplacé par / Replaced by
1.000	A0	--	--

ASSY_400_4P_DIRECT_ROTARY 00

This drawing is the property of Hager Company. It is not to be reproduced and communicated without his authorisation