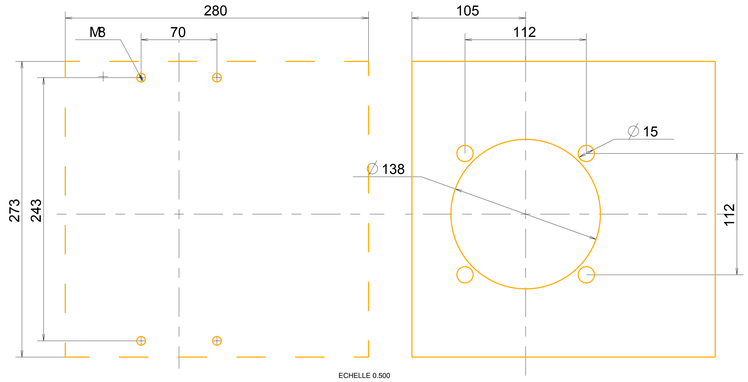

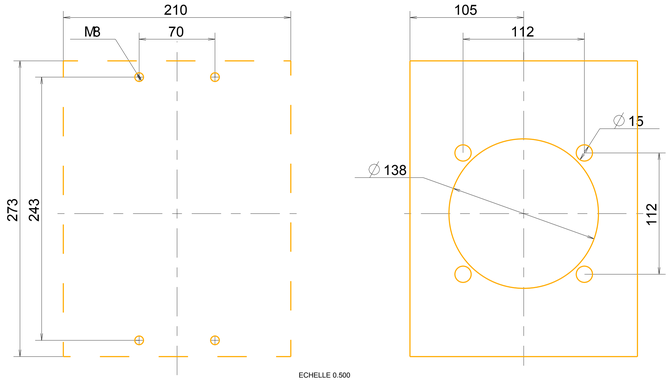

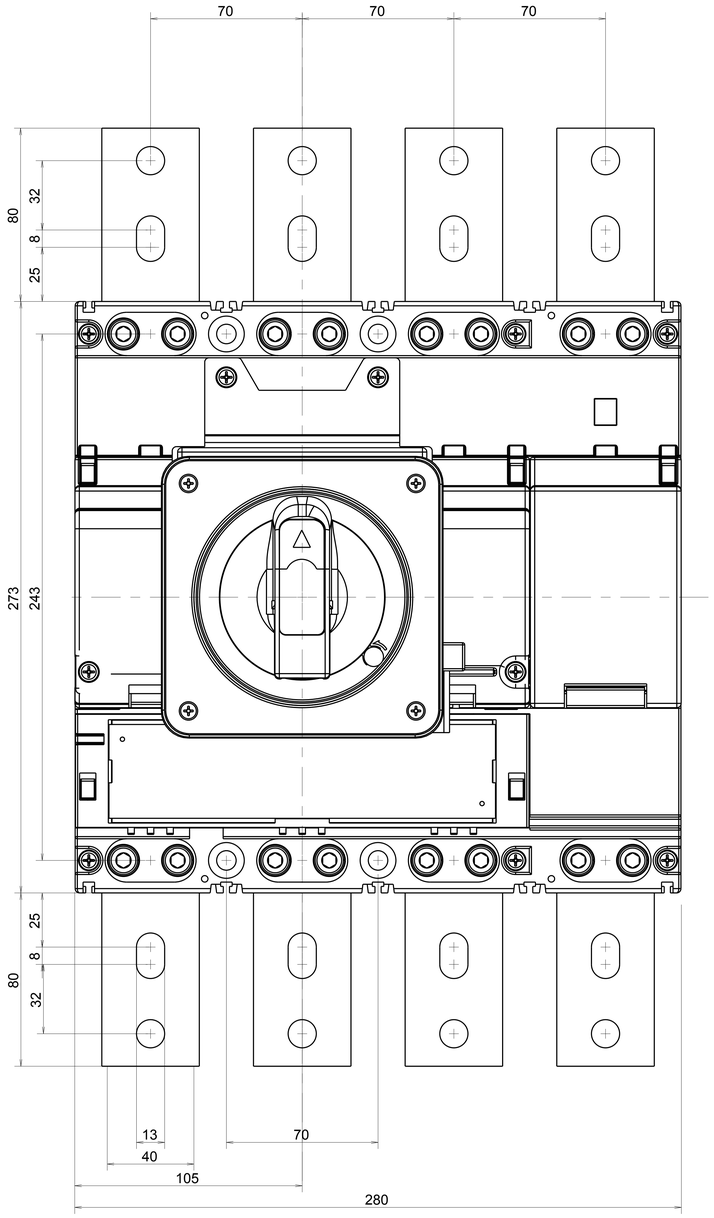

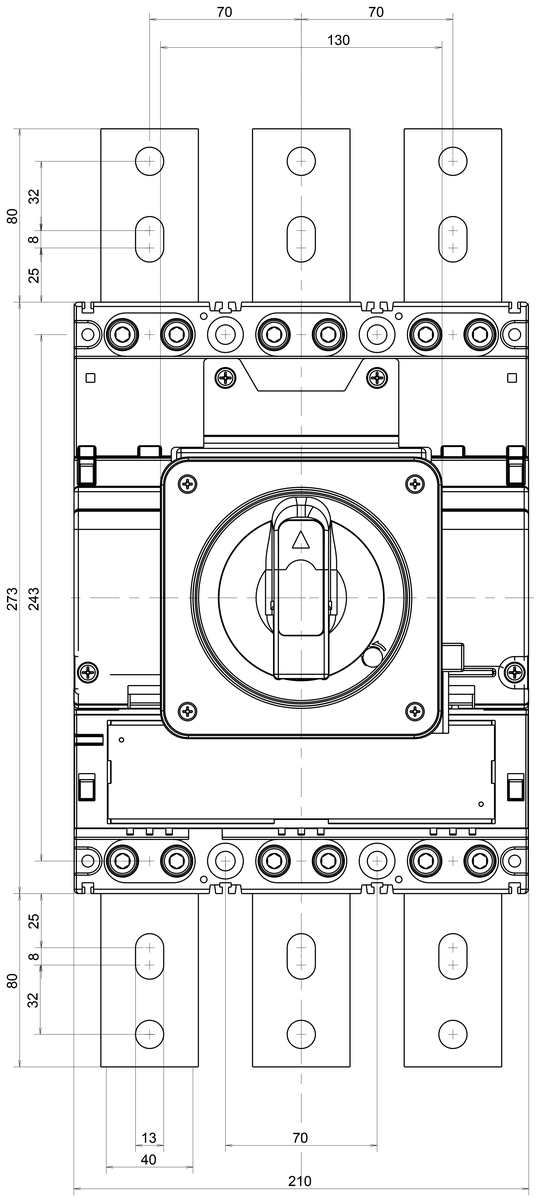

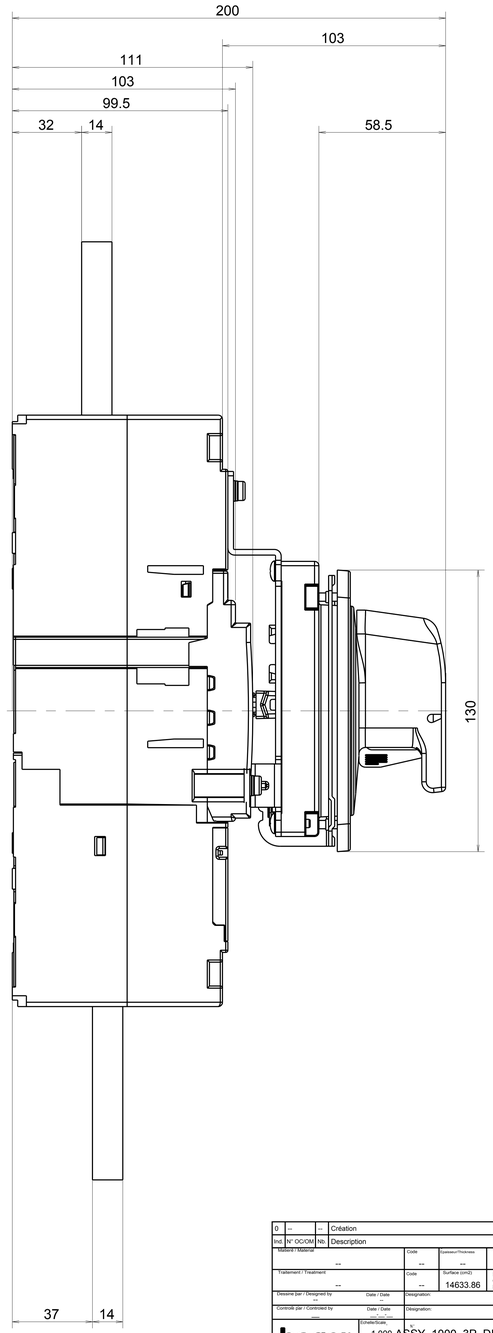

Ind.	N° OC/OM	Nb.	Description	Dessiné par	Vérifié par	Date
0	--	--	Création	--	--	--

Matière / Material: --	Code: --	Epaisseur/Thickness: --	Volume (cm3): 2485.20	Design Owners: FAZ 6015.00 --	Pp ≥ 1.33 Ppk > 1 for Toleranced Dimensions and Critical Dimensions
Traitement / Treatment: --	Code: --	Surface (cm2): 14633.86	ISO 8015 Compliant General Tolerances:ISO 2768 m-H ROHS Compliant 2002/95/CE		
Dessiné par / Designed by: -- Date / Date: --	Designation: --				
Controlé par / Controled by: -- Date / Date: --	Désignation: --				
hager Electro S.A. F 67210 OBERNAI	Echelle/Scale: 1.000	Nr: ASSY_1000_3P_DIRECT_ROTARY	00	0	
	Format / Size: A0	Replace: --			
		Remplace: --			

This drawing is the property of Hager Company. It is not to be reproduced and communicated without the authorization.